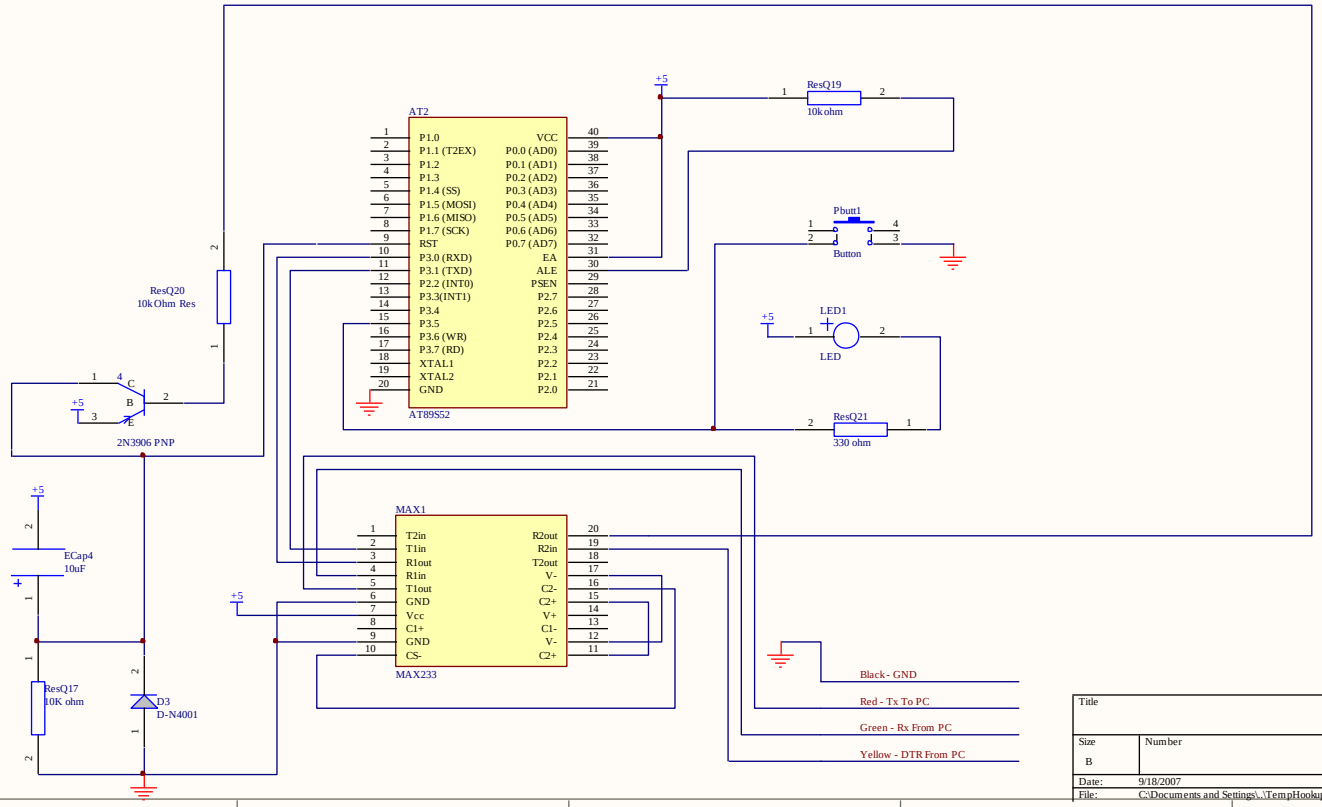

Title		
Size B	Number	Revision
Date: 9/18/2007	Sheet of	
File: C:\Documents and Settings\..\TempHookup.SCHDOC	Drawn By:	